ENEE2360 Project

Automatic Night Light

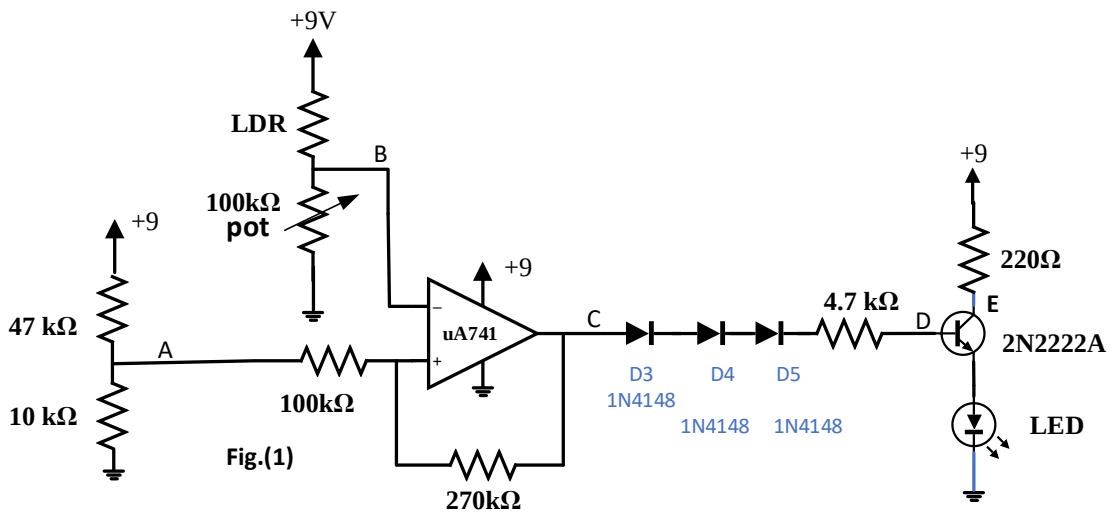

Fig.(1)

Part 1: Practical Part

a) Implement practically the above circuit and make sure to adjust the 100k potentiometer to ensure that the LED turns on when it is dark
b) Measure the resistance of the potentiometer to ground in this case
c) Measure the node voltages: VA, VB, VC, VD, and VE at dark (when the LED is on).
d) Measure the resistance of the LDR sensor at dark and at light
e) Measure the node voltages: VA, VB, VC, VD, and VE at light (when the LED is off).

Part2 :(Simulation and reporting)

a) Replace the LED with D1N4148
b) Simulate the circuit of Fig.(1) for LDR = 10K and determine VA, VB, VC, VD, and VE
c) Repeat step (b) for LDR = 100KΩ,400ΩKand 600ΩK
d) Replacing the LDR, the 100k pot, and the 9V with a VPWL Voltage source as shown in Fig.(2).
e) Simulate the circuit of Fig.(2) and plot VC(t), and VE(t).
d) Estimate the upper threshold and the lower threshold voltages from VC (t).
f) Calculate by hand the upper threshold and the lower threshold voltages.
g) Write a simple report which includes:
   1 – Explanation of the function of the circuit of Fig.(1)
   2 - Simulation circuits and results
   3 - Comparison of simulation results to hand calculation
   4 – Conclusion

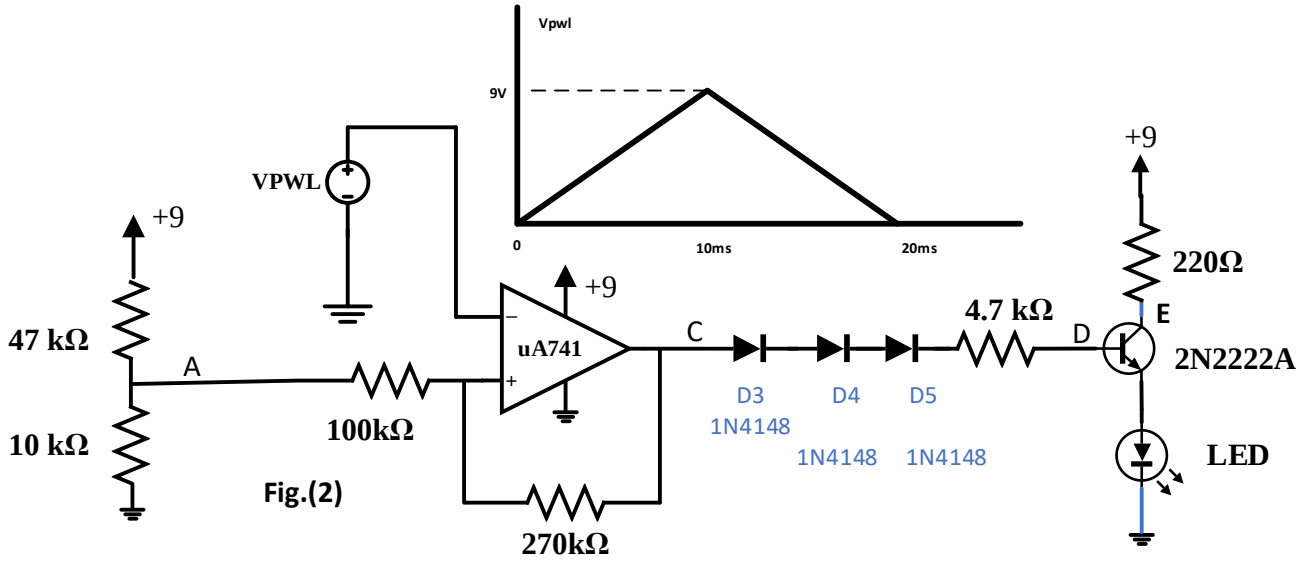

Fig.(2)